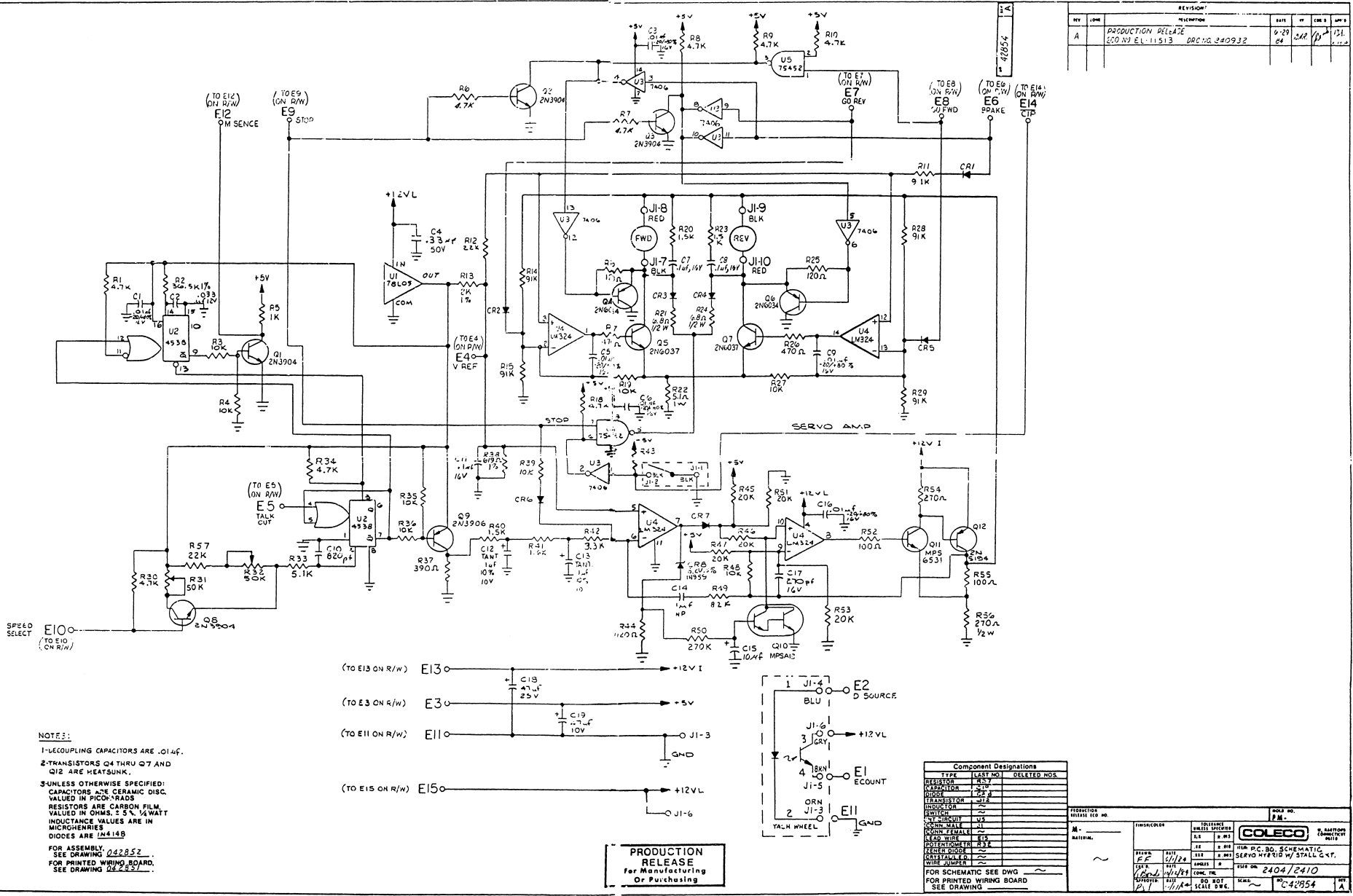

REVISION
REV | ZONE | DESCRIPTION | DATE | BY | CHK'D | APP'D
A | PRODUCTION RELEASE ECO NO EL-11513 DRC NO. 240932 | 6-29-84
(TO E12 ON R/W) E12 M SENCE
(TO E9 ON R/W) E9 STOP
(TO E7 ON R/W) E7 GO REV
(TO E8 ON R/W) E8 GO FWD
(TO E6 ON R/W) E6 BRAKE
(TO E14 ON R/W) E14 CIP
(TO E4 ON R/W) E4 V REF
(TO E5 ON R/W) E5 TALK CUT
SERVO AMP
SPEED SELECT E10 (TO E10 ON R/W)
(TO E13 ON R/W) E13 +12V I
(TO E3 ON R/W) E3 +5V
(TO E11 ON R/W) E11 J1-3 GND
(TO E15 ON R/W) E15 +12VL J1-6
E2 D SOURCE
E1 ECOUNT
E11 GND
TALK WHEEL
PRODUCTION RELEASE For Manufacturing Or Purchasing
NOTES:
1-DECOUPLING CAPACITORS ARE .01uf.
2-TRANSISTORS Q4 THRU Q7 AND Q12 ARE HEATSUNK.
3-UNLESS OTHERWISE SPECIFIED: CAPACITORS ARE CERAMIC DISC. VALUED IN PICOFARADS
RESISTORS ARE CARBON FILM, VALUED IN OHMS, ± 5%, 1/4 WATT
INDUCTANCE VALUES ARE IN MICROHENRIES
DIODES ARE 1N4148
FOR ASSEMBLY, SEE DRAWING 042852.
FOR PRINTED WIRING BOARD, SEE DRAWING 042851.
Component Designations
TYPE | LAST NO. | DELETED NOS.
RESISTOR | R57
CAPACITOR | C18
DIODE | CR8
TRANSISTOR | J12
INDUCTOR | ~
SWITCH | ~
INT CIRCUIT | U5
CONN. MALE | J1
CONN. FEMALE | ~
LEAD WIRE | E15
POTENTIOMETR | R32
ZENER DIODE | ~
CRYSTAL/LED | ~
WIRE JUMPER | ~
FOR SCHEMATIC SEE DWG ~
FOR PRINTED WIRING BOARD SEE DRAWING
PRODUCTION RELEASE ECO NO.
M-
MATERIAL ~
FINISH/COLOR
TOLERANCE UNLESS SPECIFIED
COLECO
W. HARTFORD CONNECTICUT 06110
ITEM P.C. BD. SCHEMATIC SERVO HYBRID W/ STALL GKT.
DRAWN FF 6/1/84
CHK'D 6/1/84
APPROVED 6/1/84
DO NOT SCALE DWG.
USED ON 2404/2410
SCALE ~
NO. C42854
REV A