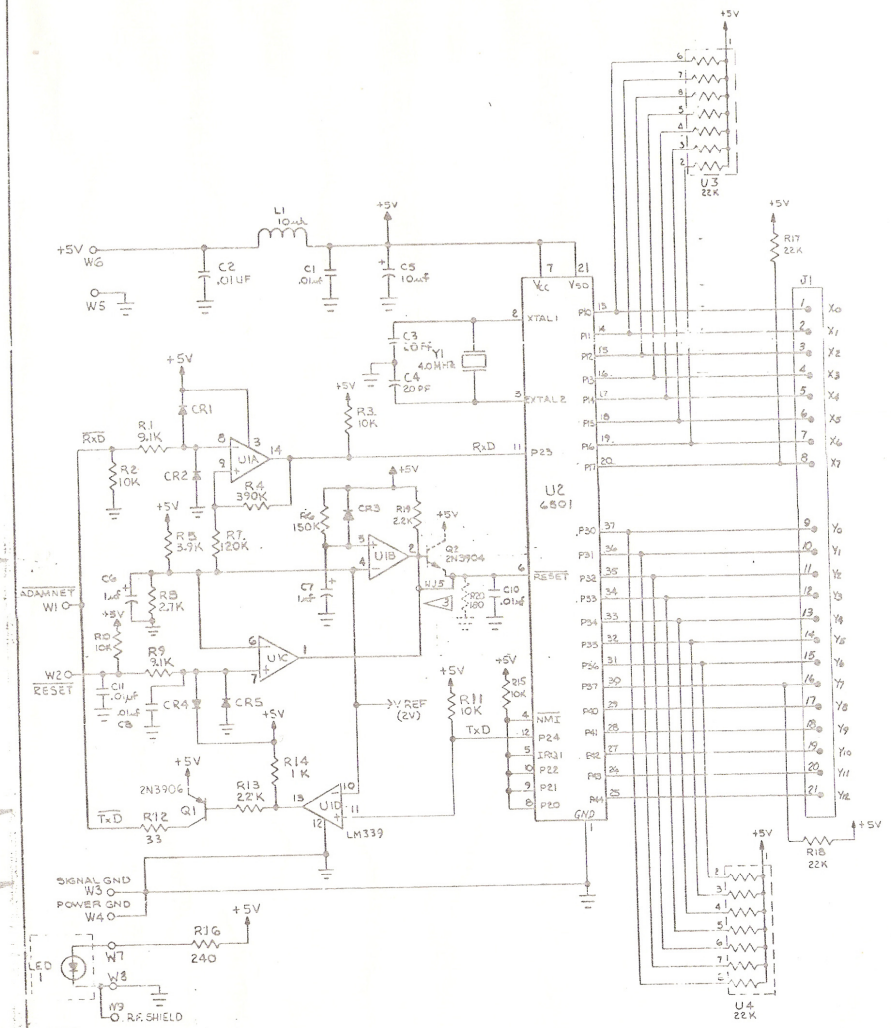

NOTES:

1. UNLESS OTHERWISE SPECIFIED:
   CAPACITORS ARE CERAMIC DISC ~~VALUED IN PICOFARADS~~
   RESISTORS ARE CARBON FILM, VALUED IN OHMS, ± 5 %, ¼ WATT
   ~~INDUCTANCE VALUES ARE IN MICROHENRIES~~
   DIODES ARE 1N4148
2. FOR ASSEMBLY, SEE DRAWING 41004
   FOR PRINTED WIRING BOARD, SEE DRAWING 41006

3. Q2 AND R20 ARE OPTIONAL, USED ONLY WHEN U2 IS A 68701 AND WJ5 IS NOT USED.

8.5"

11"

17"

22"

CONFIDENTIAL

PRODUCTION RELEASE
For Manufacturing Or Purchasing

Component Designations		
TYPE	LAST NO.	DELETED NOS.
RESISTOR	R20	
CAPACITOR	C11	C9
DIODE	CR5	CR6
TRANSISTOR	Q2	
INDUCTOR	L1	
SW		
INT. CIRCUIT	U2	
CONN. MALE		
CONN. FEMALE	J2	
LED WIRE	W9	
LED	LED	
LIGHTER DIODE		
CRYSTAL SHIELD	Y1	
WIRE JUMPER		

FOR SCHEMATIC SEE DWG ____
FOR PRINTED WIRING BOARD SEE DRAWING ____

PRODUCTION RELEASE ECO NO
M-
MATERIAL

FINISH COLOR
TOLERANCE UNLESS SPECIFIED
.XX ± .015
.XXX ± .005
ANGLES ±
DRAWN WKY DATE 6-29-83
CHK'D MJK DATE 7-20-83
APPROVED J.B DATE 7-22-83
CONC. TM.
DO NOT SCALE DWG.

COLECO
W. HARTFORD CONNECTICUT 06110

SOLD NO PM-

ITEM: SCHEMATIC KYBD LOGIC P.C.B.
USED ON: 2404/2410
SCALE: —
NO. 41007
REV. D