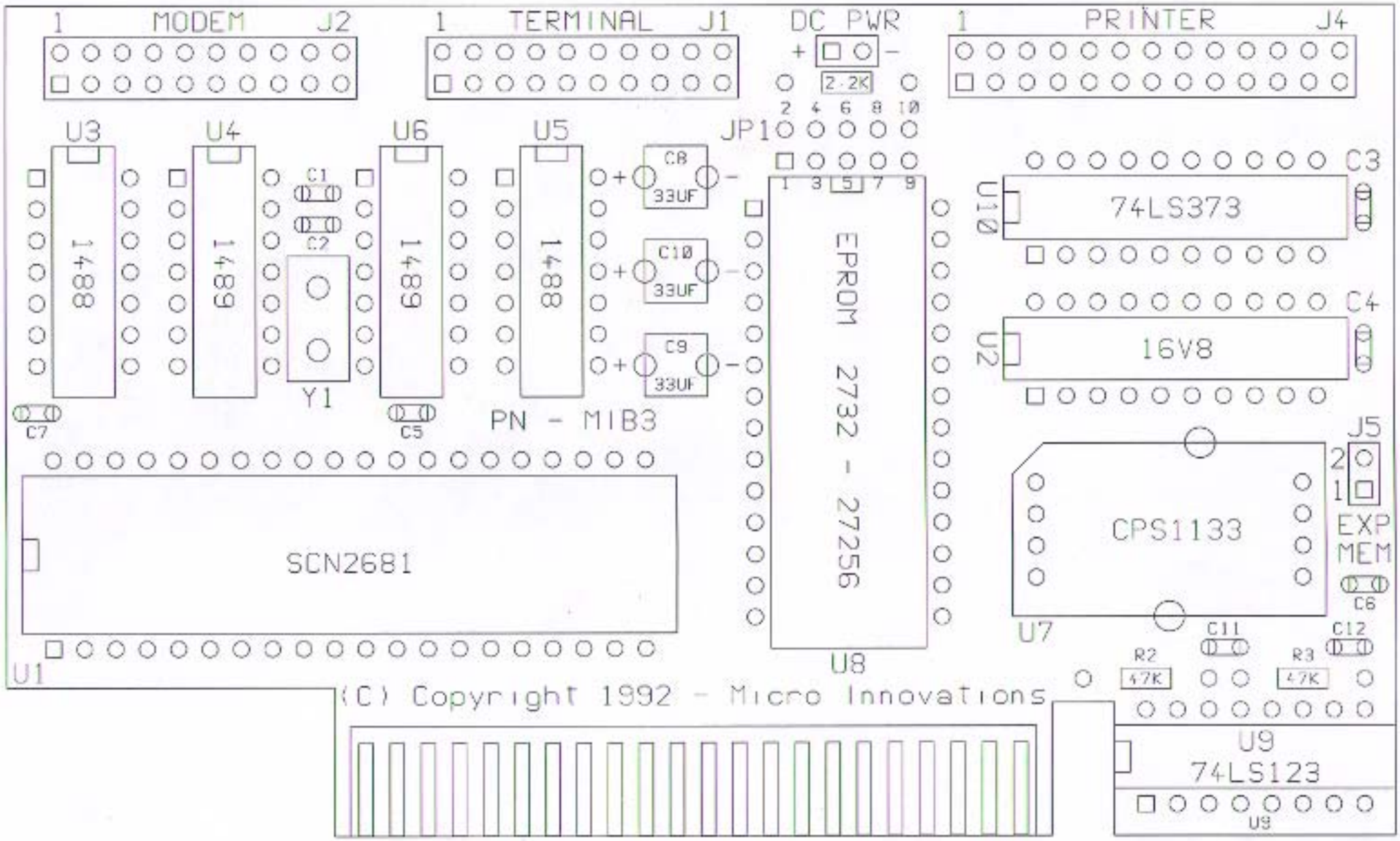
1 MODEM J2
1 TERMINAL J1
DC PWR
+ -
2.2K
1 PRINTER J4
JP1
2 4 6 8 10
1 3 5 7 9
U3
U4
U6
U5
1488
1489
1489
1488
C1
C2
Y1
C7
C5
C8
33UF
C10
33UF
C9
33UF
EPROM 2732 - 27256
U8
U10
74LS373
C3
U2
16V8
C4
J5
2
1
EXP MEM
C6
PN - MIB3
SCN2681
U1
CPS1133
U7
C11
C12
R2
47K
R3
47K
(C) Copyright 1992 - Micro Innovations
U9
74LS123
U9